Invalidation Search Sample in Chinese Language

Contents

- 1 ??????????CLIP????????FET?????
  - 1.1 ????????????????
    - 1.1.1 ????
    - 1.1.2 ????
  - 1.2 ?????????????(CLIP ???????)
    - 1.2.1 ??????CLIP ???????
    - 1.2.2 ?????
    - 1.2.3 ????
    - 1.2.4 ?????
    - 1.2.5 ????
    - 1.2.6 ?????
    - 1.2.7 ????
  - 1.3 ????
    - 1.3.1 ??CLIP???
    - 1.3.2 ????CLIP????
- 2 ????????
- 3 ????
  - 3.1 ????
  - 3.2 ?????
    - 3.2.1 ????
    - 3.2.2 ????
- 4 ???????
  - 4.1 ??1
  - 4.2 ?? 2
  - 4.3 ????
  - 4.4 ??

??????????CLIP????????FET?????

????????????????

????

- ???CMOS??

????

- ?????????????????CMOS?????????????????????????????????MOS?????????????????????????????????MOS????
- ?????????????????????FET?????????????????FET???

?????????????(CLIP ???????)

??????CLIP ???????

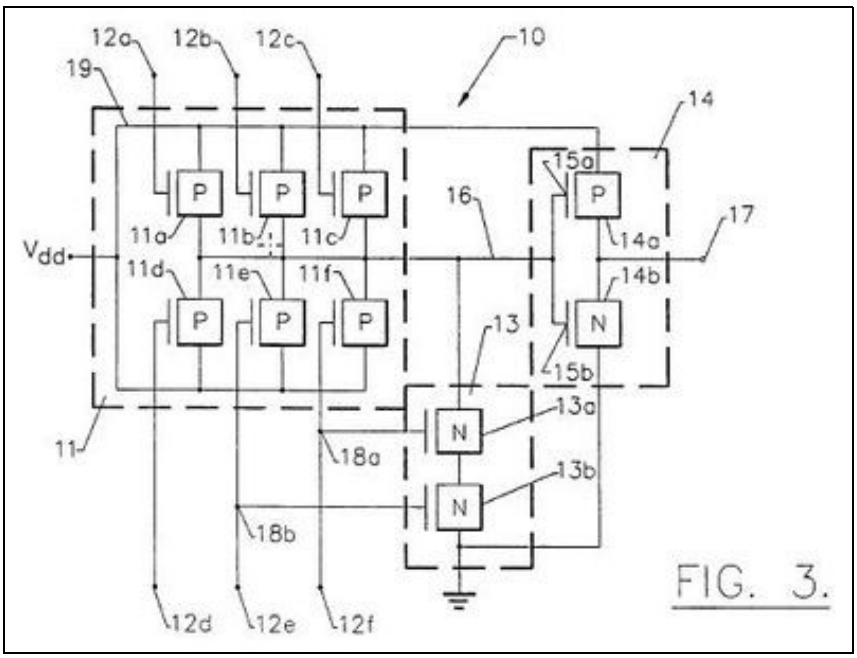

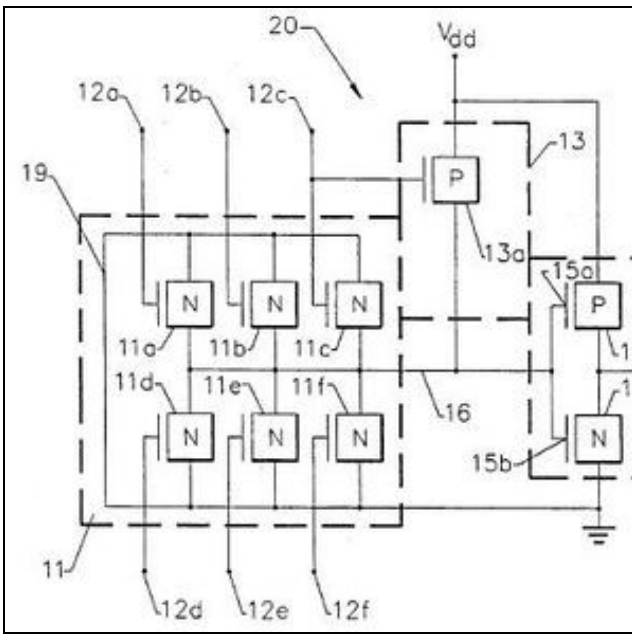

?????

- ?????????

????

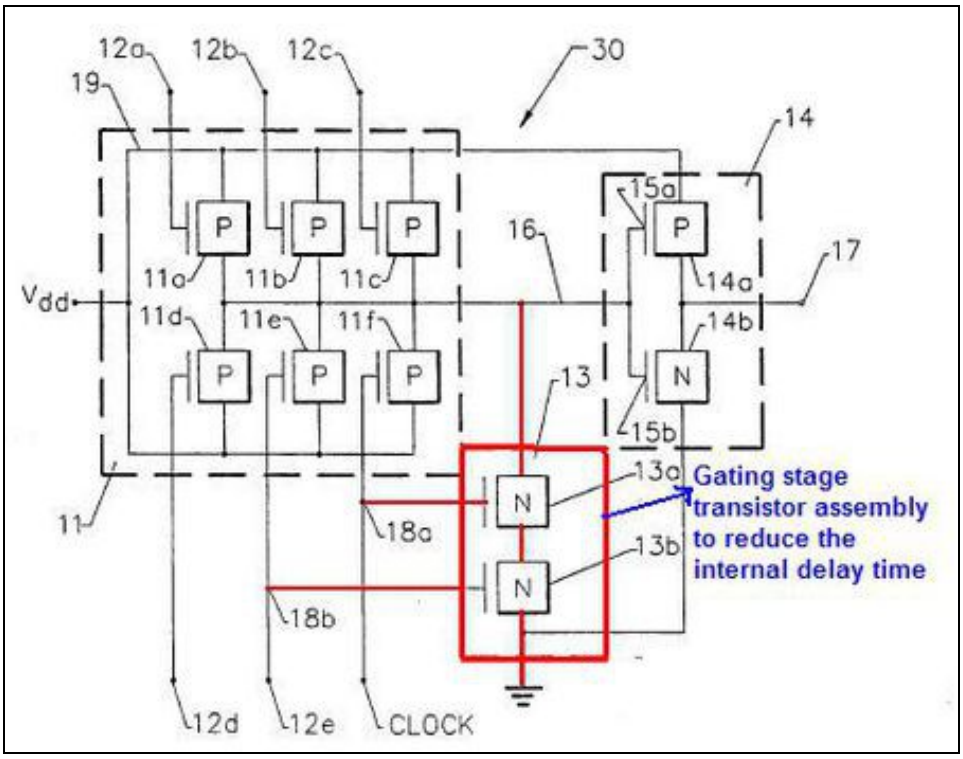

- ??
- ?????????FET???
- **??FET?????:** ???10???????13?
  ?????13?????????????16??????????????13a?13b???3??18a?18b????????11f?11e?????12f?12e????
- ??????FET???????FET????????????????

?????

- ?N???????P????????????????????????????????

????

- ????????????FET????????????P??FET?????????????????????
- ??CLIP????????????P??FET????Ge?????????N??FET?Ge?????P????????????????????????Si?P????38%??????Ge?
  ??P??FET?N??FET????????????????P??FET?????????????????????????????Ge??????????FET?????P??FET????P???N????????????????

?????

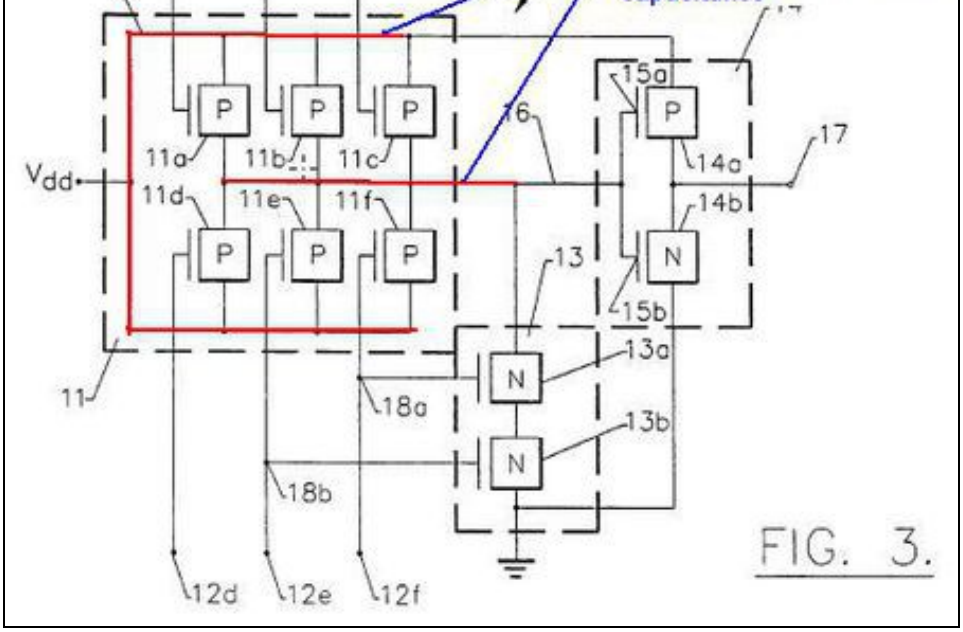

- ??

????

- ?????????????CLIP?FET?????????????????????????????????
- ??FET???CLIP????????
- ????????????????????????????????

????

??CLIP???

- ?????????????12a-12e???????????17??????
- ?????????????????????FET21?????FET13?????????????????????12a-12f??????14??????????Vdd?????????????????FET21?????FET13????????

????CLIP????

- ????CLIP?????????12a-12e??????????FET23?????????????????14???17?????
- ????CLIP????
  - ??????14???17?????FET23a???24a?
  - ?????????????????12a-12f?????????????????????11a-11e????????14???17???????Vdd?????????FET21?23?????????17?????????????

????????

- ??X?Y?????

Search result

????

????

- ??? - Micropat

S.No	Scope	Concept	Query	Hits
1	Claims, Title or Abstract	P or N channel FET?s used to increase the speed, minimize the capacitance, minimize delay time	**Query -** ((p or n) adj2 (channel or type) NEAR (FET or (field adj1 effect adj1 transistor*))) AND (((increase or step adj1 up or increment or high) NEAR (speed or performance)) OR ((minimize* or reduc* or lower* or (cut adj1 down)) NEAR capacitance) OR ((minimize* or reduc* or lower* or (cut adj1 down)) NEAR delay)) **Priority Date (earliest):** <19910131	134
2	Claims, Title or Abstract	Increase the speed of the logic circuits that includes transistors	**Query -** (increase or step adj1 up or increment or high OR enhanc*) SAME ((logic adj1 (circuit or gate or stage)) AND ((p or n) adj2 (channel or type) NEAR (transistor or *FET*1 or (field adj1 effect adj1 transistor*)))) **Priority Date (earliest):** <19910131	32
3	Claims, Title or Abstract	FET?s connected in parallel with the drains connected to Vdd	**Query -** ((p or n) adj2 (channel or type) NEAR (FET*1 or (field adj1 effect adj1 transistor*))) WITH parallel WITH (Vdd or potential or supply) **Priority Date (earliest):** <19910131	58
4	Full patent spec.	FET?s connected in parallel to increase the speed	**Query:** ((p or n) adj2 (channel or type) NEAR (FET*1 or (field adj1 effect adj1 transistor*))) WITH parallel WITH (Vdd or potential or supply) AND (logic adj1 (circuit or gate)) AND (((increase or step adj1 up or increment or high) NEAR (speed or performance)) OR ((minimize* or reduc* or lower* or (cut adj1 down)) NEAR capacitance) OR ((minimize* or reduc* or lower* or (cut adj1 down)) NEAR delay)) **Priority Date (earliest):** <19910131	33
5	Full patent spec.	FET Connection having common output	**Query -** ((p or n) adj2 (channel or type) NEAR (*FET*1 or (field adj1 effect adj1 transistor*))) SAME (parallel and (Vdd or potential or supply) and (common adj1 output)) **Priority Date (earliest):** <19910131	22
6	Full patent spec.	FET?s with channel width, channel lengths and saturation current described	**Query:** (channel adj1 (width and length)) and (saturation adj1 current) and ((p or n) adj2 (channel or type) NEAR (FET*1 or (field adj1 effect adj1 transistor*))) **Priority Date (earliest):** <19910131	13
7	Full patent spec.	FET?s of gating stage connected serially to common output and ground	**Query:** ((p or n) adj2 (channel or type) NEAR (FET*1 or (field adj1 effect adj1 transistor*))) WITH (((serial or serially) NEAR2 (connected or connection)) and (ground or VSS or potential)) **Priority Date (earliest):** <19910131	98
8	Claims	Increasing the speed in the logic circuits	**Query** - (increase or step adj1 up or increment or high) WITH (logic adj1 (circuit or gate)) AND (transistor or FET*1 or (field effect transisitor*)) and speed **Priority Date (earliest):** <19910131	100
9	Full patent spec.	Common diffusion to minimize the internal capacitance	**Query:** ((common or shared or mutual) WITH diffusion) and ((minimize* or reduc* or lower* or (cut adj1 down)) NEAR capacitance) AND (FET or (field adj1 effect adj1 transistor*) or transistor) **Priority Date (earliest): <19910131**	48
10	Full patent spec.	Increasing the carrier mobility in P-channel FET?s by doping germanium	**Query -** (p adj2 (channel or type) NEAR (transistor or *FET*1 or (field adj1 effect adj1 transistor*))) AND ((increase or step adj1 up or increment or high or enhanc* or equalize) NEAR (carrier NEAR mobilit*)) AND germanium **Priority Date (earliest):** <19910131	12
11	**Total**		**1 OR 2 OR 3 OR 4 OR 5 OR 6 OR 7 OR 8 OR 9**	**542**

??: ??????????????????????????????SIP?Google Patent??

?????

????

- ??? - Google scholar that covers IEEE
  - ???? - 1985-1990

S.no	Query	Hits
1	P N channel FET logic increase OR enhance OR high "speed"	399
2	P channel FET logic speed increase OR enhance OR high "germanium"	52
3	FET logic parallel speed drain increase OR enhance OR high OR Vdd OR potential -patents	267
4	FET logic parallel speed increase OR enhance OR high OR Vdd OR potential "common output"	30
5	P N channel FET logic speed inverter OR complimentary "common output"	4
6	P-channel N-channel FET common diffusion "parallel"	114
7	P-channel N-channel FET germanium increase OR enhance OR high "carrier mobility"	9
8	P-channel N-channel FET germanium increase OR enhance OR high "carrier mobilities"	3
9	P-channel N-channel FET germanium increase OR enhance OR high "saturation current"	6
10	P-channel N-channel FET minimize OR decrease OR reduce "internal capacitance"	4
11	Total	888

????

- ?BYTE???????????.
  - Gallium Arsenide Chips - Volume 9, issue 12 (November, 1984)

???????

??1

NAME	CLIP FET	
FIGURE	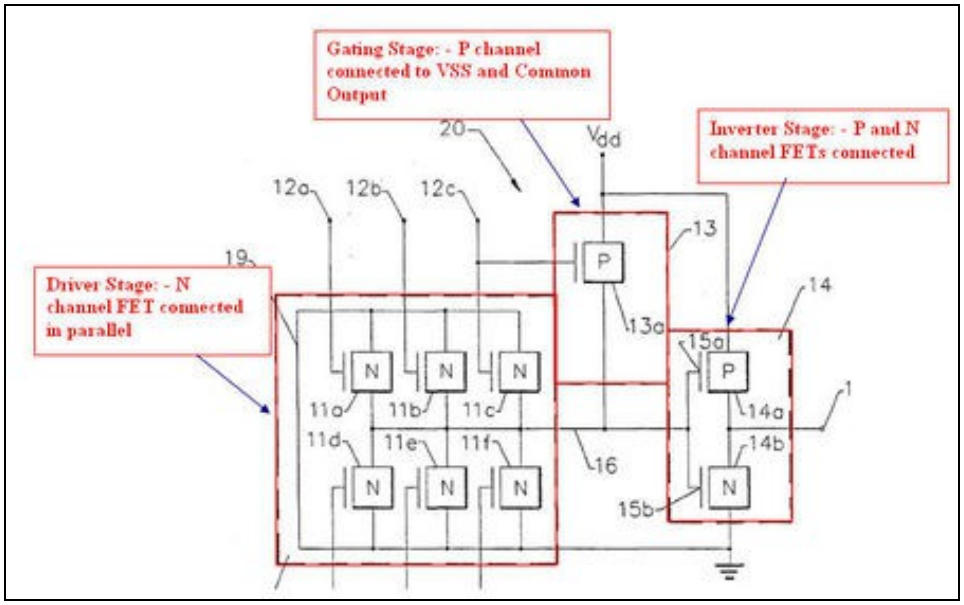	
TYPE	Patent:- US5247212	IEEE JOURNAL C
Title	Complementary logic input parallel (CLIP) logic circuit family	A 15-ns CMOS 64
Assignee	THUNDERBIRD TECH INC (US)	STANLEY E. SCH L. FRANCH, PAUI PETER W. COOK WILLIAM F. POKO
IPC		

	H01L21/8238; H01L27/092; H03K3/356; H03K19/0948; H03K19/096; H01L21/70; H01L27/085; H03K3/00; H03K19/0948; H03K19/096; (IPC1-7): H03K17/04; H03K19/003; H03K19/017; H03K19/094; H03K19/20	
Priority date	19910131	
Filing date	19910131	
Publication date	9/21/1993	11/5/1986
Driving stage	P channel FET (CLIP AND gate) / N channel FET (CLIP OR gate)	N channel FET
Connection 1	FET being connected between a common output and a first potential level (Vdd)	FET being connec
Connection 2	Control electrode of driving stage FET for receiving logic input signals (Multiple)	Control electrode
Gating stage	N channel FET (CLIP AND gate) / P channel FET (CLIP OR gate)	P channel FET
Connection 1	FET being connected between a second potential level (Ground or Vss) and common output.	FET being connec
Connection 2	Control electrode of gating stage FET is connected to a control electrode of driving stage FET,	Control electrode shown in figure. It
Complementary FET inverter	Complimentary P & N channel FETs	Complimentary P
Connection 1	FET?s are serially connected between said first and second potential levels (Vdd and (Vss or grnd))	FET?s are serially
Connection 2	Inverter input being connected to common output.	Inverter input bein
$Z_n = \frac{I_{satp}^*}{I_{satn}^*} Z_p \left(\frac{L_n}{L_p}\right) \frac{S_n}{2}$	Zg - channel width of gating transistors, Zd - channel width of driving transistors, I@*satd - saturation current for square channel driving transistor, I@*satg - saturation current for square channel gating transistor, Lg - channel length of gating transistors, Ld - channel length of driving stage transistors, and Sg - number of gating transistors	Since the connecti

?? 2

- ????21 - Ge???P??FET
- ?????????P??FET??Ge???????(? 2630?)

????

- [15-ns CMOS 64K RAM]
- [Germanium p-Channel MOSFET's with High Channel Mobility]

??

- ??
- ?????????????????

Contact Dolcera

Email: info@dolcera.com

Phone: +1-650-269-7952, +91-40-2355-3493